MAXIMA

TABLETOP CERAMIC BBQ

09378040

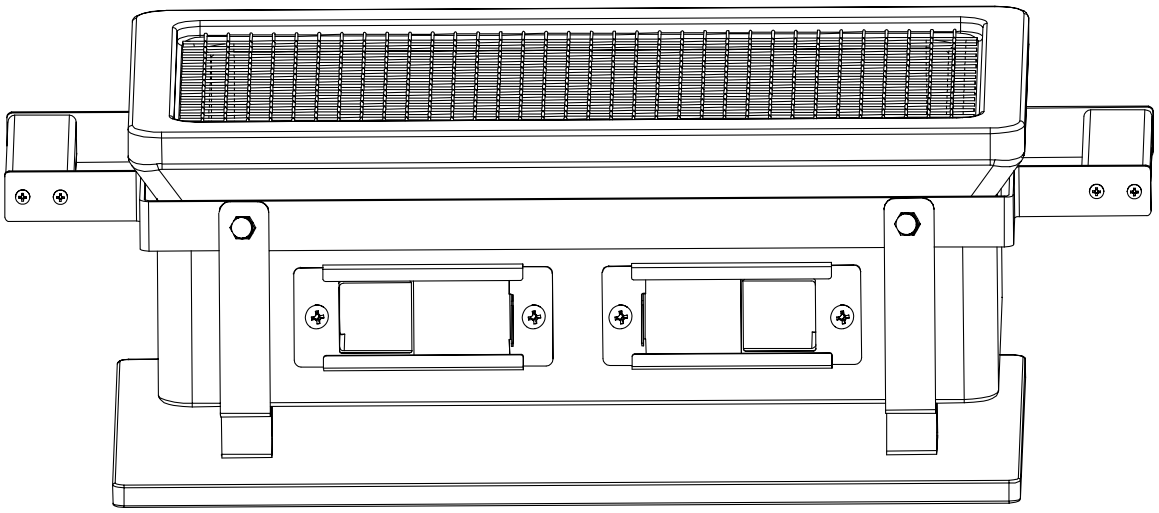

USER MANUAL

BEFORE USING THIS PRODUCT YOU SHOULD READ THIS USER MANUAL PROPERLY

Maxima - Nijverheidsweg 23 A/D - 3641 RP Mijdrecht - The Netherlands - T: + 31 (0) 297 253 969
www.maxima.com - info@maxima.com

BEFORE YOU BEGIN..

Intended use
This grill is intended for grilling food (meal, fish, vegetables, etc.) This product is not intended for commercial use. Generally acknowledged accident prevention regulations and enclosed safety instructions must be observed. Only perform work described in these instructions for use. Any other use is improper. The manufacturer will not assume responsibility for damage resulting from such use.

What are the meanings of the symbols used?
Danger notices and information are clearly marked throughout these instructions for use.

The following symbols are used:

DANGER! Direct danger to life and risk of injury! Directly dangerous situation that may lead to death or severe injuries.

WARNING! Probable danger to life and risk of injury! Generally dangerous situation that may lead to death or severe injuries.

CAUTION! Possible risk of injury! Dangerous situation that may lead to injuries.

NOTICE! Risk of damage to the device! Situation that may lead to property damage.

Note: Information to help you reach a better understanding of the processes involved.

GENERAL SAFETY INSTRUCTIONS

Read and Understand: To operate this device safely, the user must have read and understood these instructions for use before using the device for the first time.

Safety Compliance: Observe all safety instructions; failure to do so may cause harm to you and others. Always comply with all applicable domestic and international safety, health, and working regulations.

Retain Documentation: Retain all instructions for use and safety instructions for future reference. If you sell or pass the device on, you must also hand over these operating instructions.

Operational Condition: The device must only be used when it functions properly. If the product or part of the product is defective, it must be taken out of operation and disposed of correctly.

Personal Condition: Exercise caution and only work when in good condition. If you are tired, ill, or if you have ingested alcohol, medication, or drugs, do not use the device, as you are not in a condition to use it safely.

Intended Use Only: This grill is intended for grilling food (meat, fish, vegetables, etc.). Do not overload the device or use it for purposes for which it is not intended. Note: the fire basin can accommodate a maximum of around 0.8kg of ordinary charcoal.

Children and Pets: WARNING! Keep children and pets away from the barbecue. Ensure that children are not able to play with the device. Keep the device out of the way of children and other unauthorized persons.

Supervision: CAUTION! May only be used under the supervision of an adult. This product is not intended to be used by persons (including children) with limited physical, sensory, or mental capacities unless they are supervised or instructed by a person responsible for their safety.

Unattended Operation: Do not leave the product unsupervised during use. During grilling or cleaning, the grill is hot and should never be left unattended.

Safety Awareness: Always be alert! Risk of material or product damage, or hazardous behavior that could result in serious injury or even death.

DANGERS

Outdoor Use Only: DANGER! Don't use indoors! This grill is designed for outdoor use in a well-ventilated place and is not intended as a heating device and should never be used as such.

Prohibited Areas: Do not use in a garage, building, (indoor) passageway or other enclosed space.

Carbon Monoxide Warning: DANGER! Do not use the barbecue in a confined space, for example in a house, tent, caravan, vehicle or small space. Risk of fatal accidents due to carbon monoxide poisoning.

Ignition Fluids: Do not use petrol, alcohol or other highly volatile substances to ignite the charcoal. When using igniting fluid (not recommended), all liquids leaked through the boiler's ventilation holes must be removed before the charcoal is ignited.

Standards Compliance: Do not use spirit, petrol or similar liquids to light or relight the BBQ! Only use lighters in accordance with EN 1860-3!

Hot Refueling: Do not add charcoal-igniting liquid or powder-soaked charcoal to hot or warm charcoal. After use, the igniting liquid must be sealed and put at a safe distance from the grill.

Flammable Fumes: Keep the area around the grill free of flammable fumes and liquids such as gasoline, alcohol, flammable materials, etc.

ALERTS

Assembly: Use the grill only after all parts have been assembled. This grill must be mounted correctly according to the assembly instructions. Incorrect assembly can be dangerous.

Overhead Hazards: Do not use this grill under a canopy or a higher-level flammable structure.

Impairment: The use of alcohol, or medicines available with or without a prescription, may affect the user's ability to mount the grill properly or use it safely.

Moving the Grill: WARNING! This barbecue gets very hot; do not move it during use.

Vehicle/Marine Use: This grill is not intended for installation in or on camper vans, motorhomes, and/or boats.

Safety Distances: Keep a safety distance of 3 m to any flammable materials, and maintain a minimum distance of 1 m on all sides. Do not use the grill within 0.5 meters of treated wooden decks, patios and porches.

Surface Safety: Always keep the grill on a safe and flat surface, at a distance from flammable materials.

Personal Protection: Do not grill in high winds. Do not wear loose-sleeved clothing while lighting or using the grill.

Heat Protection: Never touch the grill, ash or charcoal to check if they are hot. Always wear gloves in accordance with DIN EN 407 when coming into contact with all parts of the grill.

Ash Disposal: Never throw away hot charcoal where it can be walked over or where it poses a fire hazard. Never discard the ash or charcoal until they are completely extinguished.

Storage: Do not put the grill away or store it until the ash and charcoal are completely extinguished.

PRECAUTIONS & MAINTENANCE

No Water: Do not use water to control flares or extinguish charcoal, as this could harm the ceramic product.

Tool Maintenance: Grill brushes should be checked regularly for loose wires and excessive wear. Replace the brush if you find loose wires on the grill rack or on the brush. It is recommended to buy a new stainless steel grill brush at the beginning of each spring.

IMPORTANT

Property Damage: The grill can cause damage to a piece of furniture; always place the grill on the bamboo shelf or a heat-resistant stand.

Cracks: Note that spidery cracks on the grill surface (crazing) are not defects; they will not affect the quality or effectiveness of grilling.

Fitting

CAUTION! Risk of cuts
Every care has been taken at the factory to ensure that there are no sharp edges on this unit. Be careful when handling the individual components of this unit to prevent accidents and injuries when assembling and starting up the unit.

NOTICE! Hazard resulting from damage to the product!
The product must be set up on a level and sufficiently strong surface.
If the surface is insufficiently strong, the stability of the product will be endangered.

- Set up the product on a firm, level, and sufficiently robust surface.
- After set-up, check all connections.
- Disassembly is in reverse order.

OPERATION

DANGER! Risk of explosion!
Do not use spirit, petrol or similar liquids to light or relight the BBQ!
Only use lighters in accordance with EN 1860-3!

DANGER! Danger of fire!
This BBQ grill becomes very hot and may not be moved when in use!
Keep away from children and animals! Do not used in closed rooms!

WARNING! Fire risk!
Always wear gloves in accordance with DIN EN 407 when coming into contact with all parts of the grill, since these may become very hot during operation.

Note: The fire basin can accommodate a maximum of around 0.8kg of ordinary charcoal.

1. Arrange the charcoal pieces in the fire basin in pyramid form.
2. Evenly space dry charcoal lighters around the pyramid.
3. The pyramid is best lit using a match.
4. Only start to cook when the fuel is covered with a sheet of ash.
5. Grease the grilling rack with a little vegetable oil and start grilling.

Note: Be aware that significant smoke may be generated during grilling; keep yourself and others clear of the smoke. The product may darken over time due to smoke and combustion.

Cleaning
After grilling, never pour water directly onto the fuel to extinguish it, as this could harm the product.

Cleaning the grill:
Do not use sharp objects or aggressive cleaning agents.

Storage, transportation

Storing in closed rooms
Whe not using the product, remove all charcoal, and always store it clean and dry condition at room temperature. Store the appliance in a frost-free and dry place.

Transport
When dispatching, try to use the original packaging, if possible.

Disposal
This appliance must not be disposed of with regular household waste! Dispose of the appliance in the appropriate manner. For more information, consult your community waste disposal service.

Kamado “crazing”
Upon close inspection, the finish of your ceramic Kamado may appear to have crack lines. This is not the cracking of the ceramic. This is known as ‘crazing’.

Crazing in kamado ceramics is a phenomenon that occurs during the manufacturing process. It results from the different rates at which the ceramic and glazed finish cool. Essentially, it creates hairline cracks on the surface of the kamado, but there’s no need for concern. Some Kamados may show crazing more than others, slightly altering their aesthetic looks. However, it does not affect performance. Your kamado will still function as intended, therefore, not a warranty issue. The process of ‘crazing’ effectively increases the toughness of the unit.

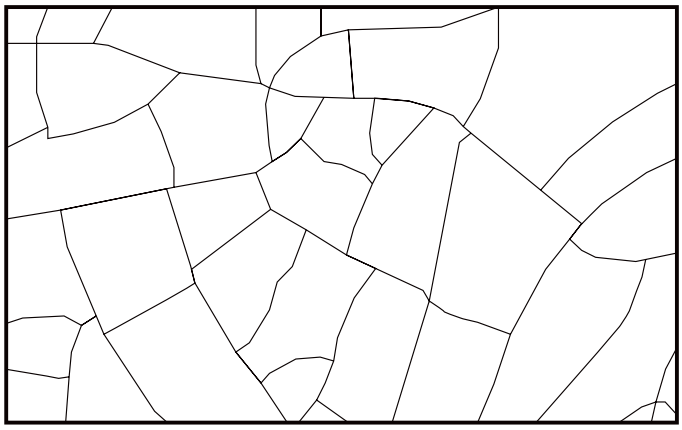

ASSEMBLY INSTRUCTIONS

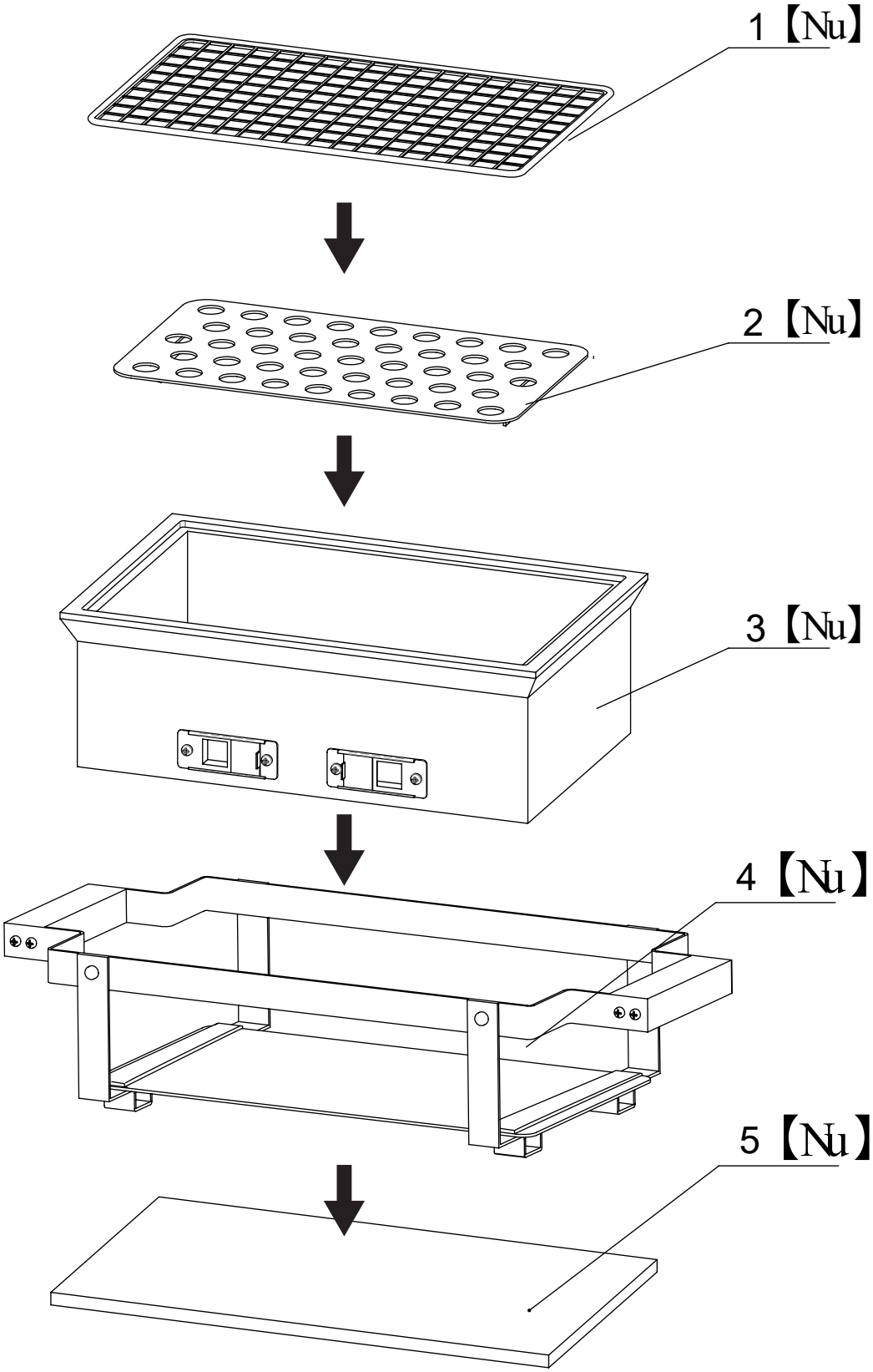

Maxima - Nijverheidsweg 23 A/D - 3641 RP Mijdrecht - The Netherlands - T: + 31 (0) 297 253 969
www.maxima.com - info@maxima.com