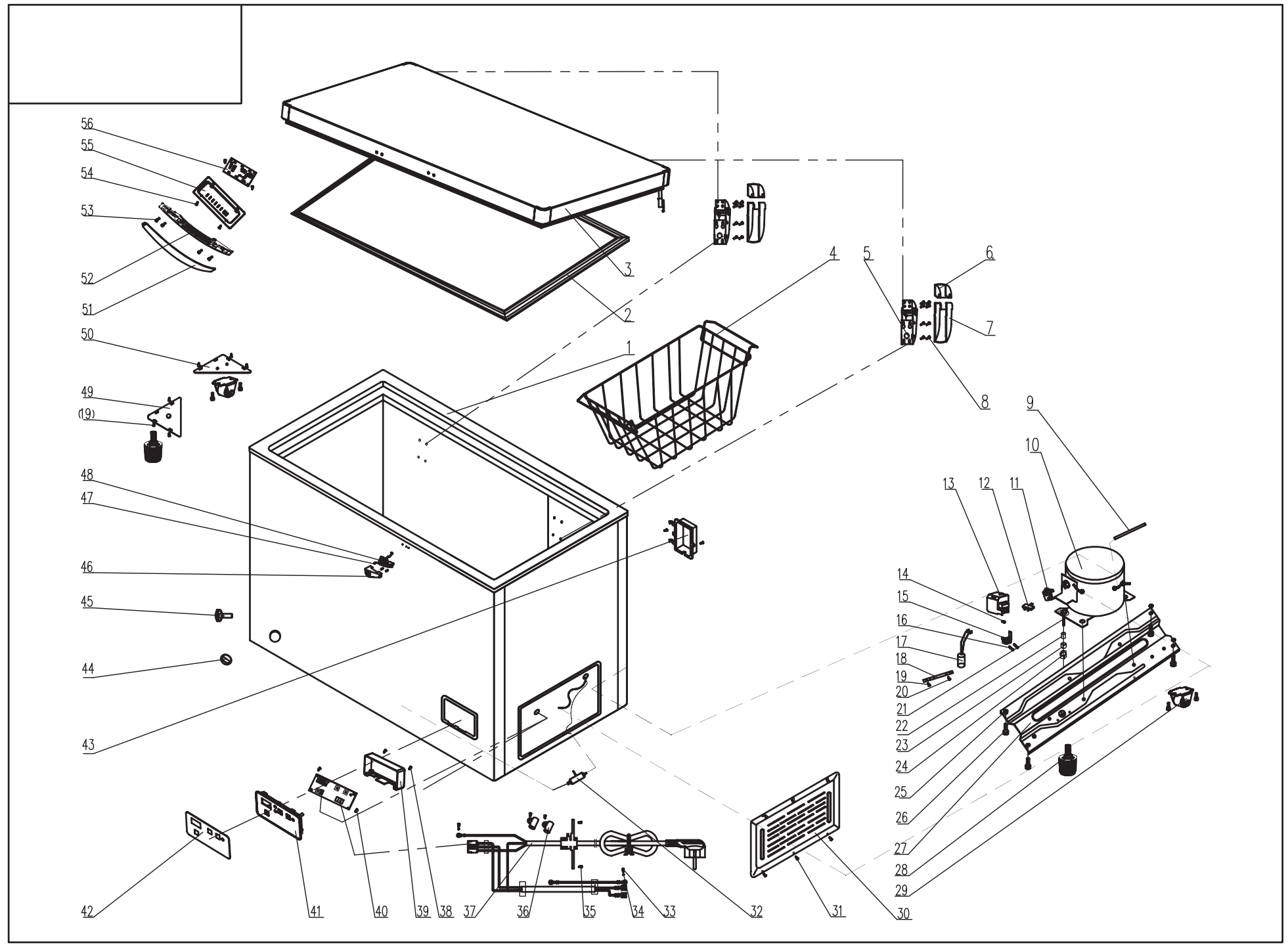

NO	Apellation	QTY	NO	Apellation	QTY
1	Cabinet Assy	1	36	Wire clip	2
2	door gasket	1	37	Power cord	1
3	Door Assy	1	38	Tem Control Panel Back Cover	1
4	Basket	1	39	Screw, 845 SS ST	4
5	Gemel	2	40	PC Board	1
6	Upper cover	2	41	Temperature Control Pantel	1
7	Bottom cover	2	42	Temperature Control Panel Film	1
8	Hinge Fixing Screw	16	43	Junction box	1
9	Compressor pipe	1	44	Drain plug	1
10	Compressor	1	45	Drain hole stopper	1
11	PTC Starting relay	1	46	lock cover	1
12	Overload Protector	1	47	screw	3
13	Cover	1	48	Lock accessories	1
14	Fastening screw	1	49	The former triangle	1
15	Cable clamp	1	50	After the triangle	1
16	Cable clamp screw	2	51	Door handle cover	1
17	running capacitor	1	52	Door handle seat	1
18	capacitor bracket	1	53	screw	8
19	Screw	7	54	screw	4
20	Screw	1	55	LED Light Cover	1
21	Fixing Screw	4	56	LED Light	1
22	Suction Tube Sleeve	4			
23	Rubber spacer	4			
24	nut	4			
25	nut	4			
26	Self tapping screw	4			
27	Compressor support	1			
28	Front foot	2			
29	Roller	2			
30	Compressor cover	1			
31	Triangle Lock Screw	6			
32	Filter	1			
33	Cooper Screw	2			
34	Cooper Outer Gear Washer	2			
35	Self-Tapping Screw	4			